SOFT FOOT

Causes, Characteristics, and Solutions

By Alan Luedeking

I. Definition of Soft Foot

"Soft Foot" is a generic term that represents *machine frame distortion*. Anything that causes a machine frame or casing to distort upon tightening (or loosening) a hold-down bolt is called a soft foot. As such, a soft foot condition can have many different causes, which produce different behaviors of the machine casing as it distorts. A given behavior can be analyzed to determine its probable cause, which in turn may suggest the likeliest solution to the problem.

II. Effects of Soft Foot

The effects of a soft foot condition are numerous, and all are harmful. When a machine that has a soft foot condition is anchored tightly to its foundation, the resulting distortion of its casing and bearing housings deflects the shaft internally as the bearing bores of the machine move out of alignment with each other. This shaft distortion changes its position in relation to the other machine shaft that is coupled to it. The resulting *misalignment of the centerlines of rotation* between the two coupled shafts produces excessive vibration that causes premature wear in the rotating components of the machines, such as the coupling, bearings, and rotors. In addition, the vibration from the misalignment of the centerlines of rotation results in premature wear and failure of seals, packing, and other non-rotating elements of the machine. Catastrophic machine failures, unplanned downtime and higher repair costs are the consequences.

The internal misalignment of the bearing bores resulting from a soft foot distortion of the machine frame also *increases the radial load on the bearings*, since it is the bearings that carry the shaft and must act directly upon it to deflect or distort the shaft. The increased radial forces that result from this action drastically reduce bearing life. The life expectancy of a ball bearing is inversely proportional to the ratio of the design load to actual radial load, cubed. This means that doubling the radial load on a ball bearing reduces its life expectancy (under otherwise identical operating conditions) by eight times. Tripling the load reduces it by 27 times! This can be expressed as a formula:

$$\text{Expected Bearing Life} = \left(\frac{\text{Design Load}}{\text{Actual Load}}\right)^3 (\text{B10 Hours Life})$$

Formula 1

Keep it running.
1425 NW 88th Avenue, Doral, FL 33172
T: 305.591.8935 F: 305.591.1537 info@ludeca.com www.ludeca.com

B10 Hours Life is the bearing manufacturer's given *minimum* life expectancy for a group of 90% of identical bearings at maximum design load and speed conditions. Actual bearing life under normal conditions may typically be expected to be between three to five times the B10 Hours Life.

In addition to increasing radial load on the bearing, a soft foot-caused distortion of the bearing housings also distorts the bearings themselves. See Figure 1.

Fig. 1

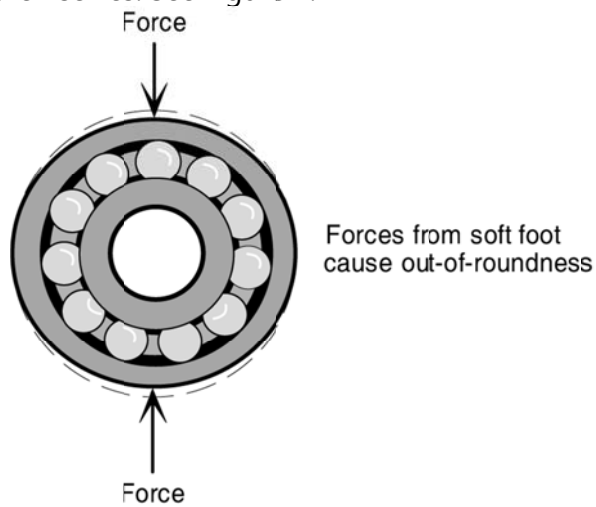

This distortion is often evidenced by diametrically opposed wear zones on the inside of the outer race of a ball- or roller bearing. This presupposes that the bearing was properly installed in the first place, free from unintended preloads.

As the shaft turns, it must always conform to the pathway of the bearing bores. Therefore, the elastic deflection in the structure of the shaft induced by the soft foot is amplified to *double* the magnitude of the deflection that exists when at rest. As it turns, the shaft is being fully deflected back and forth cyclically, every 180° of rotation. Figure 2 below shows this, by illustrating the path that the unrestrained shaft would take if the deflection in it were a permanent bend in the structure of the shaft.

2

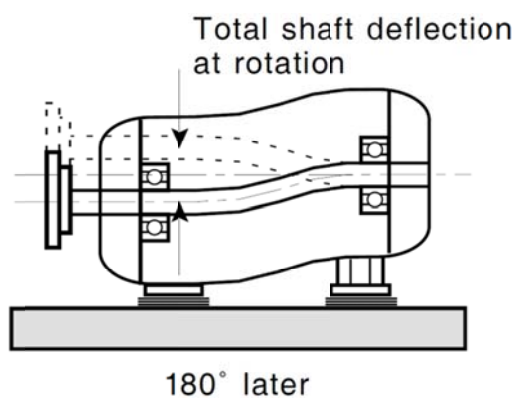

This bending action occurs in all directions at *twice* the speed of rotation, since it reverses every half a revolution. Thus, a machine that spins at 1800 RPM and runs continuously will have its shaft deflected cyclically 5,184,000 times a day! (2 times every revolution × 1800 RPM × 60 minutes × 24 hours). Eventually, structural fatigue may result in an unexpected break of the shaft, perhaps only after numerous prior bearing and seal failures have occurred due to the vibration this bending action induces.

III. Causes of Soft Foot

A soft foot can be caused by many different things. Missing shims under one or more feet may cause the machine frame to distort as the hold-down bolts are tightened. Too many shims under a foot may create a high spot on the base that also produces distortion. Bent feet or angled support pads under the feet will distort the machine frame as its feet are tightened down. Similarly, on a vertical flange-mounted machine, a non-planar contact between the machine flange and its support surface will produce distortion.

An externally induced machine frame distortion may occur if pipe stress is present; this is also properly considered a 'soft foot' situation. Why? Improper pipefitting can exert enormous stresses on the machine frame, trying to pull, push, or twist the frame away from its intended position. If the hold down bolts were entirely absent, these pipe stresses might be great enough to lift the machine right off the base, or angle it with respect to its base. Therefore, as the hold down bolts are tightened to anchor the machine down, its frame is distorted, just the same as if there were shims missing under a foot or the soleplate were angled with respect to the foot. Thus, pipe strain falls under the family of causes that produce a "soft foot" situation, or machine frame distortion.

Incidentally, similar distortion may be created through thermal growth or dynamic positional shifts of a running machine that is placed under operating loads. These are no longer considered soft foot since they are a product of the machines' own dynamic behavior when in operation. As such, they would instead be handled by means of special design accommodations to the foundation, base or structure of the machine itself, and by alignment target specifications during the "cold" alignment procedure, and thus fall outside the scope of this discussion.

IV. Measuring Soft Foot

Proper measurement of the effects of soft foot involves discerning and quantifying the impact on shaft movement that results from loosening or tightening a hold down bolt. The careful measurement and comparison of these movements from foot to foot can help us ascertain *why* the machine is behaving the way it does, which in turn puts one well along the way to finding the right solution to the problem. The overall 'picture' of how the machine frame behaves is important to understanding why it reacts as it does, each time an individual foot is loosened or tightened. To obtain this picture, several careful steps must be taken, with a thorough understanding of the measurement techniques and principles involved.

Usually, a soft foot condition can be corrected simply by shimming the correct machine foot or feet by the correct amounts. Sometimes this even involves step shimming a foot* if the problem is an angled soleplate or bent foot, or may require actual remachining of the foot or support surface. On the other hand, eliminating an "induced" soft foot (i.e., pipe stress) (see Section V) simply requires removing the undue external forces that are acting on the machine frame.

The Measurement Procedure — Considerations

In order to correctly diagnose (i.e., analyze and reach a conclusion as to correction) a soft foot problem, it is necessary to understand why the machine behaves in the ways that it does, in reaction to soft foot stresses. It must be emphasized here that a soft foot condition means that a machine frame is strained (i.e., distorted) and therefore under constant stress when all of its feet are bolted down at the correct torque. Since most machines have four feet, and three points always define a plane, fitting a fourth point into that plane will always require careful machining or shimming, as well as clean conditions. Fulfilling these requirements will usually take care of most

* For more information on step shimming see the article *Best Practices: Machinery Alignment Shimming* by Alan Luedeking, under the Resources tab on the Ludeca website at: http://www.ludeca.com/res_articles_alignment.php

soft foot problems. To discover if a soft foot exists on a four-footed machine, one should only loosen *one foot at a time*, with the other three feet tight!*

The frame will always seek to relieve the stress within it, to the greatest extent possible, wherever it can. Thus, as you loosen each foot individually (always with the other three tight) that foot will move, relieving as much of the distortion within the machine frame as possible for its location. As the frame and bearing housings undistort, the internal alignment of the bearings will change; therefore, the shaft contained within these bearings will also undeflect and move. This movement will result in a change in the alignment of this shaft with respect to the other shaft that it is coupled to, and it is this change that we seek to accurately measure. When considered jointly with the nature of the movement of the feet, this information is highly significant in helping to diagnose the cause, and by extension, the solution for the problem. Since a machine frame is a structure of complex shape and varying flexibility, *it is more important to know how much the shaft has moved* when a particular foot is loosened or tightened, than it is to know just how much the foot itself moved. On a rigid frame with flimsy feet, you could see significant foot movement with very little effect on overall frame and shaft distortion. In the opposite scenario, a weak machine frame with very sturdy feet might mean that even just a little foot movement represents significant machine frame and shaft distortion. Therefore, relying on foot movement only to diagnose the problem may not be entirely reliable—in fact, it can be highly misleading. Thus, shaft movement is "all important" in diagnosing the situation. Let us delve a little deeper into why this is so: Keeping in mind that three points constitute a perfect plane, imagine now a rigid machine frame with four feet, whose undersides are all perfectly machined into a plane. This frame with perfect feet rests upon a perfectly clean, glass-smooth base that is also perfectly flat. Now imagine that all four feet are torqued tight to this base. Now loosen just one of these feet. Obviously, under these perfect conditions, nothing should move when you loosen just that one foot, because any one of the four feet is in the plane of the other three. If, on the other hand, you loosen one foot and shaft movement occurs, what can one conclude, beyond the shadow of a doubt? That machine frame distortion was present when all four feet were tight, for whatever reason(s) might be causing it.

Now let us examine a bit more closely the nature of the shaft movement that results from relieving stress within a frame by loosening a foot. Shaft movement from distortion relief can be characterized as primarily angular in nature, since only one foot is being allowed to move, with the others tight. Since the amount of *offset* at the coupling generated by this movement is dependent on the distances involved (rise over run), it can be highly variable, depending on the geometry of the machine. Therefore, it is better to directly measure the *angularity* of this observed movement instead. Laser systems which employ only the "reverse indicator" approach to measurement, or only measure offset, are necessarily limited in their usefulness for measuring the effects of soft foot. Much better is a system that directly measures the angularity of the movement and then calculates the foot movement from that value.

The Soft Foot Function of the best laser alignment systems will detect the change in relative vertical angularity that occurs when a foot is loosened, and *calculates* the corresponding value of foot movement that would have been required to produce it. The values displayed by a Rotalign Ultra for instance, are calculated according to the following formula:

$$\textbf{Soft Foot Reading} = |2\Delta VA\ (FB)|$$

Formula 2

where ΔVA is the change in the Vertical Angularity, and FB is the distance Front Foot to Back Foot of the machine being checked. The result is always displayed as an absolute value.

Why is vertical angularity measured, and not horizontal? Given that the anchor bolts are tightened in the vertical direction, a machine's movement resulting from the distortion its frame must always have a vertical component to it. A change in horizontal angularity may also occur, but

* If a machine has more than four supports, loosen all except the four nearest the rotor supports, and treat the machine as if it were an ordinary four-footed one, providing you are dealing with a compact, rigid frame.

its magnitude and direction are unpredictable and possibly inconsistent, and therefore less suitable to the accurate and consistent detection and measurement of a soft foot problem.

Since the laser alignment system measures the change in relative shaft angularity and not the pure machine foot movement per se, it is *not a pure gap meter* for the air gap that may appear under a machine foot when you loosen it. Instead, it is *a soft foot effects meter*. What this means is that the calculated value for soft foot at the machine foot is just that: a calculated value and not a directly observed movement at that foot. Since the machine's movement is by definition distorted, and the inherent flexibility of the machine frame and bearing play absorb some of the strain, it is quite natural *to obtain a calculated value that is slightly different* (usually smaller) than what that foot may actually have moved.

Note also that it is irrelevant to the system which foot is loosened on either machine, since only the Front to Back Foot dimension is involved. This has the advantage that you may check for soft foot on both machines without having to switch the laser emitter and receiver components around on the shafts, so long as you make sure that the Front to Back Foot distance entered in the computer is the correct one for the machine whose foot you are checking. Furthermore, it also does not matter whether you take your readings by starting with the foot tight and loosen it, or start with the foot loose and tighten it, since the displayed value for the soft foot reading is the calculated absolute value of the undistorted foot movement, regardless of whether this movement was positive or negative. In the same vein, it is immaterial whether a right or left foot is loosened. This gives the laser system's Soft Foot Function great versatility for ease of use. (Incidentally, a torque wrench and proper lubrication of the fastener threads are a must for a correct (and repeatable) tightening of the hold-down bolts.)

Lastly, if you look at the formula again, you will notice that the measured vertical angularity is doubled in order to calculate the soft foot reading. This is necessary since you are only loosening *one foot at a time.* Since in normal machine frames the shaft is located exactly half way between the left pair of feet and the right pair of feet (as you look along the axis of the shafts), then, if you loosen only the left foot and it were to rise ten mils, while the right foot is left tight and rises nothing, then it follows that the shaft in the middle between them will only rise 5 mils. See Figure 3 below. Thus, the vertical angularity at the shaft centerlines that is produced by a soft foot movement as you loosen or tighten the foot is only half the value that would have been obtain had both front feet or both back feet been raised together by the same amount that the single soft foot alone moved.

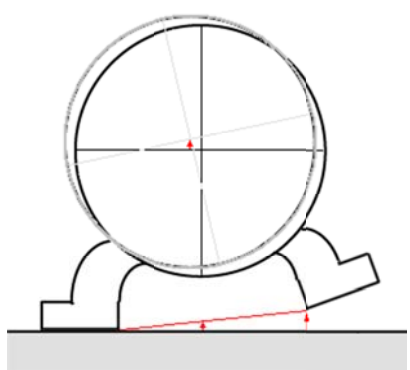

Fig. 3

To find the correct shimming solution for the soft foot problem requires additional analysis and may require measurement of the actual gap values that appear under the soft feet. These are best obtained with feeler gauge readings taken under the soft feet while these are loose, always with the other feet tight. The objective is to accurately measure this air gap and determine whether it is even or uneven, so as to determine the shape or taper pattern of the air gap. In the event that an uneven (not parallel) airgap is measured, it is important to know the *direction* of taper or slope (if any), as this will greatly help you to diagnose the types of forces acting on the frame, and thereby hint at a probable cause. A significant taper means that a consistent difference in the measured air gap of at least two thousandths of an inch (0.002") occurs from one corner (or edge) of the foot to

the opposite corner or edge. Always make a note of *which way* the air gap points, *from highest to lowest*. To do this, mike the air gap at the four corners of the soft foot itself, by measuring the separation between the underside of the foot and the top of the shim pack which is already in place. Again, it is imperative that this area be clean and the shims in excellent condition in order to be able to do this accurately. You may omit miking the corner of the foot that is farthest inside the machine frame, if it is too difficult to reach, provided that the three outside corners of the foot can be accurately miked. These three should be sufficient to establish the direction of taper, if any.

The procedure to measure soft foot follows, and applies only to four-footed machines, or those rigid machines with more than four feet whose non-rotor-bearing feet have been preloosened so as to treat such a machine as if it were just a four-footed one. Machines whose frames are not rigid or more complex situations are treated in Section VII.

The Measurement Procedure — Sequence of Steps

1) Thoroughly clean the area under and around the machine feet.
2) Rough-align the machines to remove any coupling strain. Even if uncoupled, you should still rough align prior to beginning soft foot measurement procedures, since soft foot conditions may change if large moves are later made later in aligning the machines. Also eliminate any obvious air gaps or gross soft foot conditions, using four or fewer (if possible) precut stainless steel shims.
3) Use your laser system's Soft Foot Function to obtain a soft foot reading at each foot of the machine. Remember to loosen only *one foot at a time*, always keeping the other three tight. Any reading greater than 0.002" is considered a soft foot. If your laser system does not record these values for you then record these values manually for later use.
4) After each measurement tighten that foot completely to the correct torque value and then repeat Step 3 for all four feet (if practical) to establish repeatability.
5) Once each foot has been loosened in turn and all soft foot readings recorded, see if any of them is greater than two mils (0.002"). If so, use feeler gauges or an inside micrometer to carefully measure the air gap under the foot with the largest soft foot reading first. If necessary, mike the others also. (The determination of whether or not it is necessary to measure the air gap under the foot or feet with the second and/or third largest readings will be addressed later in this paper, as we analyze different soft foot situations.)
6) Analyze the data obtained and "diagnose" the soft foot condition, and decide on a corrective action.
7) Correct the problem.
8) Recheck soft foot starting at Step 3 to make sure that the problem has indeed been eliminated.
9) Proceed with the final alignment of the machines, preserving any relative differentials in shimming under the feet while performing alignment corrections.

This general procedure applies to both (or all) machines in your machine train. Always find and correct soft foot on the stationary machine first, and then on any machines to be moved. Remember, it is *not* necessary to switch your laser system components around on the shafts to obtain soft foot readings for the feet of the Stationary Machine, if you have a competent laser alignment system that allows you to set any pair of feet in the train to be stationary. (Just make sure all of your dimensions are entered correctly for the orientation of your actual setup.)

The "Soft Foot Diagram" shown below in Figure 4 is a handy form for recording and analyzing the laser soft foot readings and air gaps that you obtain.

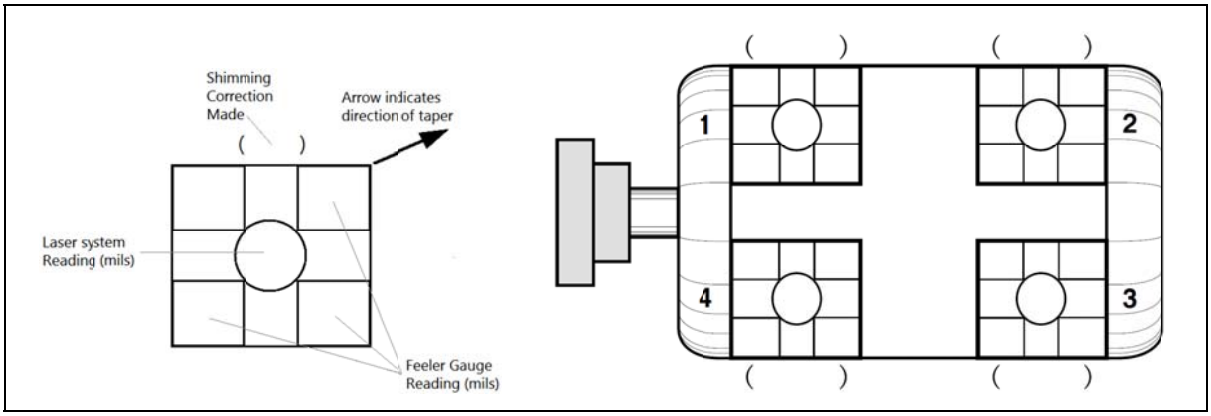

Fig. 4

V. Behavioral Characteristics of Soft Foot (Four-footed Machines)

A soft foot condition in a machine frame can be accurately measured and analyzed in terms of the shaft and foot movement that it generates upon tightening or loosening a hold-down bolt. The overall "picture" which emerges from studying these shaft and foot movements relative to each other can be used to diagnose the most likely causes (and hence the likeliest solutions) to the problem. All these movements, taken together, represent the "behavior" pattern characteristic of a particular soft foot condition.

Soft foot behavior can be classified according to its causes. Four basic types or families of soft foot behavioral patterns can be readily identified. These are:

Type 1) "Rocking soft foot"
Type 2) "Angled soft foot"
Type 3) "Induced soft foot"
Type 4) "Squishy soft foot"

Within each of these types or families of behavior patterns, there may exist several subtypes (more specific behavior patterns) that are representative of particular soft foot conditions or problems. Following, we will present various individual behavior pattern combinations that are representative of these types.

Type 1: The Rocking Soft Foot

Type 1a: The "Short Foot" Rocking Soft Foot

In this situation, also called a "short foot rocker" or "parallel soft foot", one foot of a four-footed machine is missing shims, or is machined too short. This will cause the machine to rock between this 'short' foot and the one located diagonally across from it on the other side. The other two feet of the machine form a high ridge, across which the short foot and its diagonally opposed partner will rock. When all four feet are tightened down, the short foot and its diagonally opposed partner are both forced to contact the support surface. Since the machine frame is flexible, it will bow and deform to accommodate itself to the new configuration of the feet. This is exactly the same situation as would occur with a chair that has one leg too short and rocks. If a heavy person sits on this chair and it no longer rocks, it is because the structure of the chair has deflected and twisted until all four feet contact the ground. The machine must be properly shimmed to correct this situation or it will deform to the extent that it can, when the anchor bolts are tightened, resulting in internal misalignment of the bearing bores, poor seal contact and seal deformations, and undue bearing preloads, as previously discussed.

Type 1b: The "Even" Rocking Soft Foot

Here we have two "short feet" or shims missing evenly from two *diagonally opposed* feet on a four-footed machine. In this situation, the machine will behave similarly to the case of the short foot rocker (Type 1a), in that it rocks between the two feet missing shims. Again, both 'short' feet must be shimmed up, or both 'high' feet must have shims removed from them to correct the problem. The first alternative is usually to be preferred over the other since it corrects the problem without affecting the existing shaft alignment of the machines. It is also very likely that shims may be missing in unequal amounts from these diagonally opposed corners. This we might call an "uneven rocking soft foot." The diagnostic techniques and solutions remain the same, however. See Section VI for more detail on analyzing and correcting the problem.

Type 1c: The "High Foot" Rocking Soft Foot

Also called a "high foot rocker", in this case, a machine with four feet has too many shims under one foot, or that foot is machined too long, or a bump or protrusion on the base upon which that foot rests is affecting it. Again the machine will rock, but this time between the two feet adjacent to the 'high' foot, which are diagonally opposed to each other. Here, either the high foot must have some shims removed from it, or the other three feet can be shimmed up to make them parallel with the high foot. However, an even better third alternative exists which will be discussed in the section devoted to detailed analysis and corrections (Section VI). This excellent third alternative is revealed by means of the "Short Cut Method" for rocking soft feet and will be discussed in detail at the end of Section VI.

Type 2: The Angled Soft Foot

Type 2a: The "Outside" Angled Soft Foot

Sometimes called an "outside bent foot soft foot", this situation presents one or more feet on a machine which are bent up to the outside, or mismachined on an angle with respect to the support surface, in such a way that only the inner edge or corner contacts the support surface when the foot is unloaded and undistorted. Alternatively, the foot may be perfect, and instead it is the base, sole plate, or other support surface which is angled relative to the foot. In these cases, the angled contact between the foot and its support surface will cause the both the foot and the machine frame to distort as this foot's hold-down bolt is tightened and the foot is forced to deflect until it fully contacts the support surface. Moreover, tightening the outside angled foot will cause lifting forces to be induced in the machine frame. This is further evidenced by the shaft and foot movement that occurs when the other, (not angled), feet are loosened and rise.

Type 2b: The "Inside" Angled Soft Foot

In this case, also called an "inside bent foot soft foot", the contact between foot and base again is angled, but this time with a decreasing slope from inside to outside. In other words, with the problem foot loosened, an uneven air gap will be seen, highest on the inside. This results in primarily negative (downward) forces being induced in the machine frame when the foot is tightened. This time, loosening the two adjacent feet will not relieve the stress within the frame much, and little or no movement occurs, as these feet are trying to move downwards into the base instead. The diagonally opposite foot may experience some positive rise due to the conversion of the negative forces "washing over" the "hump" formed by the nearer two feet. More on this in Section VI.

Type 3: The Induced Soft Foot

Type3: The "Induced" Soft Foot

This is a broad classification which embodies most types of distortion produced by outside forces acting on the machine frame. By far the most common of these is pipe strain, or conduit strain. It is obvious that improper pipefitting may exert substantial forces on the machine casing, resulting in machine frame distortion when the improperly fitted pipe is forced to mate to its counterpart flange on the machine. The existence of pipe stress and its exact effects of on *shaft alignment* can be measured and quantified by way of a special procedure described in Ludeca's

TechNotes for various different laser alignment systems such as Rotalign® Ultra and Optalign® Smart RS. (TechNotes are a series of documents with procedures to deal with special applications, available from Ludeca, Inc.) In this paper we are concerned more with the effects pipe stress has on machine frame distortion (soft foot) than with its impact on shaft alignment; however, the elimination of undue pipe stress solves both problems at once and a competent pipefitter can be the millwright's best friend in these situations.

The effects of pipe stress on machine distortion and movement are very difficult to predict or quantify accurately. However, in general, when a machine evidences a soft foot problem but its behavior pattern does not fall into one of the clearly defined patterns that characterize the other types of soft foot problems, then an induced soft foot should be suspected and an independent pipe strain verification procedure should be undertaken to prove that a pipe strain problem exists. Let us add here a small clarification of terms: "Pipe Stress" is the force exerted on a machine frame from improperly fitted and supported piping; "Pipe Strain" is the resulting distortion from that stress.

Coupling strain from misalignment of the coupled shafts may also cause the shaft and feet to move when a foot is loosened; however, it is *not* included in this family of problems since, by definition, it is an alignment problem. Moreover, as this condition would change or influence an unrelated soft foot behavior, it must be eliminated prior to embarking on the formal soft foot measurement procedure. Therefore a rough alignment is essential before beginning soft foot readings, and should precede all other activity in the alignment job except for safety procedures (lockout and tag-out) and basic policing of the work area. This also makes sense from the standpoint of the alignment job in general, since it would be pointless to expend time and effort in rectifying a soft foot situation only to then discover that the machine is bolt-bound or base-bound and must come off the base for further corrective action.

Type 4: Squishy Foot Soft Foot

Type 4: The "Squishy" Foot Soft Foot

In this case, when a foot is loosened, a movement of the shafts or feet is again observed. However, this time it is due to an external force acting on the foot itself, and pushing it up. This situation can be caused by too many shims under the foot, bowed or bent shims, and shims with burrs, dirt or oil. The foot will be caused to move by the powerful spring effect of the shims under that foot (much like a leaf spring.) Having this condition is harmful because it means that the torque on the hold-down bolt or nut is being exerted in overcoming the spring effect, rather than being applied to properly anchoring the machine to its foundation. Thus, a bolt torqued to the proper specs might not necessarily guarantee that that foot is adequately secured against operational load stresses.

A "squishy soft foot" is a condition that should be eliminated in the initial clean-up and rough alignment of the machine, prior to the formal soft foot checking procedure. Good alignment practice suggests that one never use more than three, or at the most four, clean, precut stainless steel shims under a foot. Good base preparation will ensure that it is never necessary to violate this rule of thumb, since standard commercially available precut shims allow you to achieve any desired thickness of up to 0.150" with three or fewer shims, given the 13 different standard thicknesses normally available. It is important to note that precut stainless steel shims that are clean and flat will exhibit a compression factor of at most 0.5% to 1% of the total thickness involved. (In contrast to this, brass hand-cut shims may yield as much as 5% to 6% compression!) Additionally, one should allow approximately 0.00025" to 0.0005" movement for each air gap between shims. Therefore, the acceptable tolerance for a soft foot movement or laser reading is 0.002" or less.

VI. Analyzing a Soft Foot Condition

As mentioned before, the behavior pattern of a soft foot condition is a combination of the air gap patterns under the feet as well as the angular movement of the shaft. The shaft movement is calculated by the laser system as a theoretical movement of the foot that was measured. We will now explore the specific behavior patterns of the soft foot situations described in Section V, and suggest solutions to these problems. Remember, each of these behaviors occurs only when individual feet are loosened *one at a time*, always with the others tight! The illustrated examples reflect this. Note that the explanations for behavior and suggested solutions relate *only* to the specific examples shown.

Type 1: Rocking Soft Foot

Type 1a: The Short Foot Rocking Soft Foot

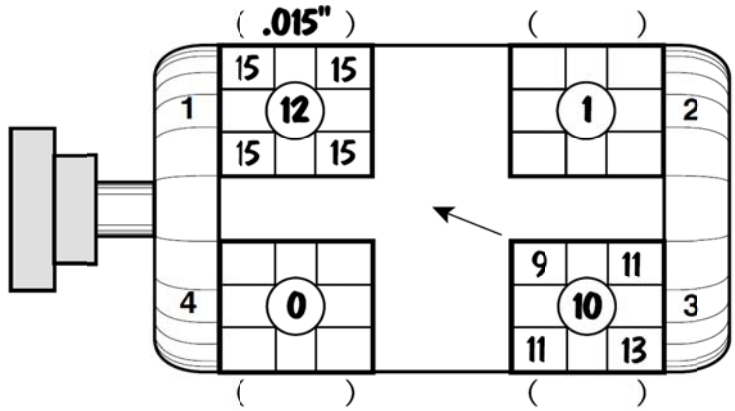

Behavior:

Your laser system will show two high values diagonally opposed. See Figure 5. One of these will likely be somewhat larger than the other (usually by 10% or more.) In the example given, this is Foot 1. The remaining two diagonally opposed feet (Feet 2 and 4) will show 0.002" or less and are not considered soft.

Feeler gauges find that one of the soft feet has an even air gap (not tapered, parallel to the base.) This will usually be the one that presents the higher laser reading. The other, diagonally opposed soft foot (Foot 3), presents a tapered air gap that "points" diagonally (from highest air gap to lowest) towards the soft foot with the even air gap.

Diagnosis:

The soft foot with the even air gap (and higher laser reading) is too short, or is missing shims. (This is Foot 1 in the illustrated example in Figure 5.)

Solution:

Shim Foot 1 by the amount of the even air gap that was measured (0.015").

Analysis:

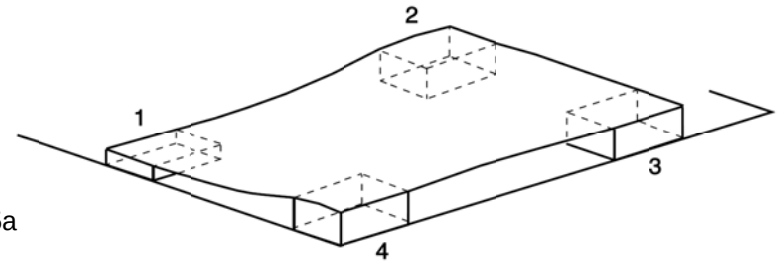

Fig. 5a

tight

When a foot that is short or is missing shims (in this case Foot 1) is forced down to its support surface with the other feet already bolted tight, the frame will be distorted. See Figure 5a.

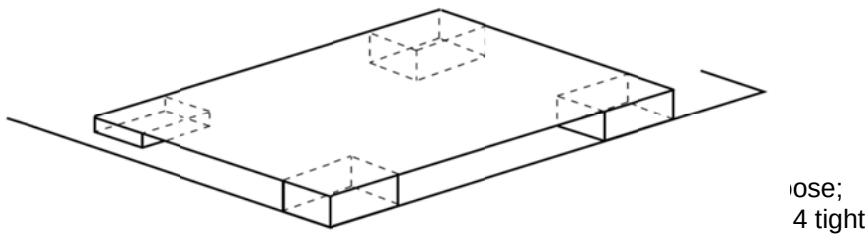

If the short foot itself is released with the other three feet tight, the stress is relieved and the foot will "pop up" into the plane of the other three parallel feet. The amount by which it was too short will appear as an even air gap under the foot. The remaining two feet that were not soft (Feet 2 and 4) will not move if loosened individually (with the others tight), since they represent the high "ridge" across which the frame is being bowed. When both soft feet (Feet 1 and 3) are tight, the forces being exerted on these "high feet" (Feet 2 and 4) are negative (downwards), so no strain relief occurs when these feet are loosened.

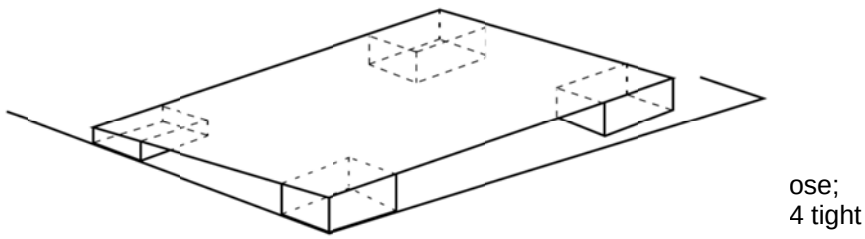

With all feet tight, the stress that the short foot induces in the frame will also be relieved when the foot that is located diagonally opposite from the short foot is loosened. This foot (Foot 3) will rise, and as it does, it leaves the plane of the other three feet, presenting an outside-to-inside tapered air gap that "points" towards the short foot. See Figure 5c.

It should be noted and emphasized here that this type of problem (the "short foot" rocking soft foot), manifests itself by generating unacceptably high soft foot readings at two separate, diagonally opposed locations on the machine frame, when the correct procedure is followed of only loosening one foot at a time. As we have just seen, this does *not* mean that you have two separate soft foot problems on the machine; instead, you are seeing evidence of the same problem at more than location on the machine frame. This circumstance is often the single biggest source of confusion for the inexperienced millwright, leading him or her to "overcorrect" the problem as he or she ends up shimming both soft feet by the full amount of the soft foot reading that was obtained at each soft foot. Let us not forget that the machine frame will seek to relieve the stress within it as much as possible wherever possible, and therefore it is entirely likely that we may see evidence of a given problem in more than one location as we loosen the feet *one at a time.* The whole point of these exercises is to familiarize you with these distinct behavior patterns, so as to spare you the frustration of "chasing your tail" (so to speak), in performing unnecessary soft foot corrections. When both feet are shimmed by the full amount to correct a problem that only existed at one of the feet, the problem will simply be transferred to the other two feet since you have now inadvertently created a Type 1c "high foot" rocking soft foot. In other words, you "killed the same problem twice", and that is overkill—never a good thing.

Type 1b: The Even Rocking Soft Foot

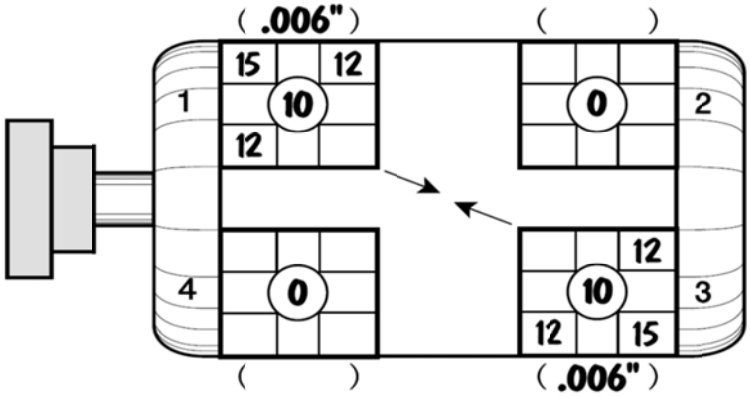

Behavior:

Laser readings indicate soft foot at two diagonally opposed feet. The values will be identical (or very similar to each other.) The other two feet are not soft.

Feeler gauges find tapered air gaps under both soft feet. These gaps taper (from highest to lowest) from the outside corner toward the inside corner of the soft feet, each pointing inwards towards the other diagonally opposed soft foot.

Conclusion:

Both soft feet (in this case Feet 1 and 3) are "short" or missing shims.

Solution:

Shim both soft feet by 50% of the average air gap that was measured under each of them. You may instead remove the same amount of shims from under the two "high" feet that were not soft; however, the first suggested solution is better, for several reasons. (See analysis below.)

Analysis:

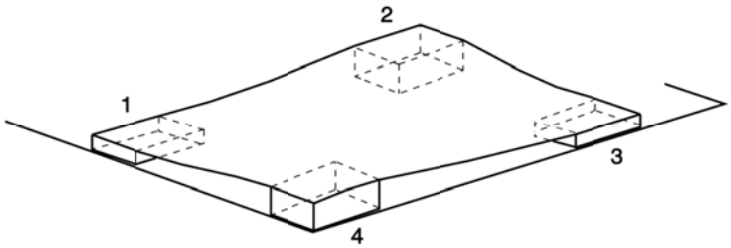

et tight

When both feet diagonally opposed to each other are short or missing shims, tightening all the feet will bow the machine frame across the "hump" or ridge formed by the two high feet.

e;
ight

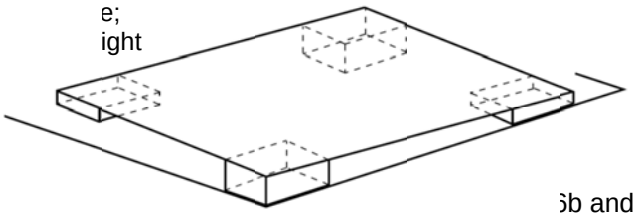

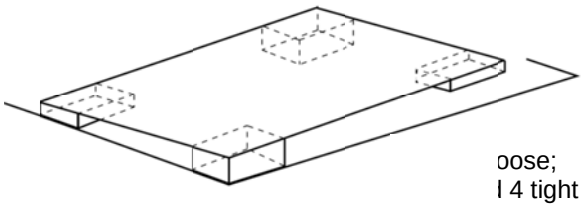

6b and 6c

oose;
l 4 tight

Loosening each soft foot individually causes it to come up beyond the plane of the two that are not soft. Thus, both of them taper inwards towards each other. See Figures 6b and 6c. Since loosening each of the soft feet individually affords the machine frame the *full value* of the distortion relief, shimming the full air gap under both of them would be overkill. Therefore, we must split the difference and level the machine by shimming both feet up by just half of the amount they came up.

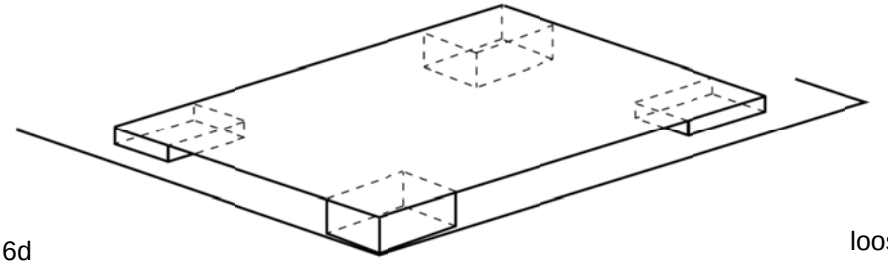

Fig. 6d

loose

This will eliminate the problem without affecting the *undistorted* leveled alignment position of the machine, relative to the other machine. If you remove shims from the high feet instead, the entire machine will now be lowered to the plane of the two "short" feet. This changes the alignment between the two coupled machines. Since soft foot corrections are being performed with the machines already rough aligned, it behooves us to choose the solution which affects the alignment the least. It is important to note that in many, if not most, cases, the amount of shims missing from under the two "short" feet may differ from one another. Therefore, the soft foot readings may differ from each other by more than 10%. However, do not be misled into believing that you are dealing with a Type 1a Short Foot Rocking Soft Foot—the key difference here is that both air gaps taper inwards, whereas in the Type 1a Short Foot only one of them did! Perhaps the better name for this situation should be an "uneven rocking soft foot". However, the diagnostic approach and solution remain exactly as described above. See "A Short Cut to Analyzing and Correcting Rocking Soft Foot" at the end of Section VI for a more in-depth view of how the machine behaves in this case.

Type 1c: High Foot Rocking Soft Foot

Fig. 7

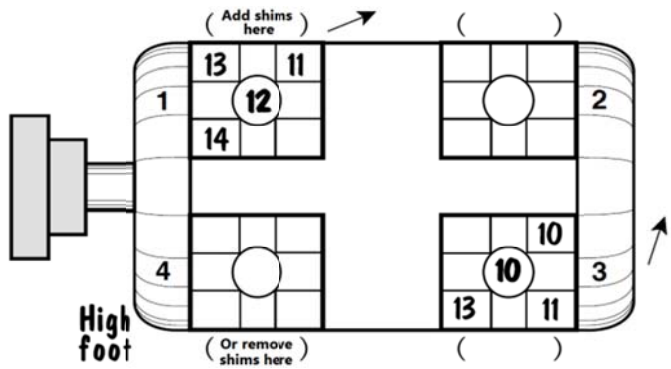

Behavior:

Your laser again finds two soft feet diagonally opposed. One produces a higher value than the other does (by 10% or more.)

Feeler gauges find that both soft feet have tapered air gaps which point *outwards* towards one of the adjacent feet that was not soft. Put another way, both of these air gaps point *away* from the opposite adjacent corner that also was not soft.

Conclusion:

One foot is "high"—it is machined too long, or has too many shims under it. (In this example Foot 4.) The foot with the higher laser soft foot reading (here Foot 1) will almost invariable belong to the soft foot that is located closest to the high foot.

Solution:

(1) Add shims to the soft foot nearest the high foot ***or*** (2) remove shims from under the high foot, ***or*** (3) add shims to the remaining three feet. The first solution is the best, for the reasons that will be presented in the Analysis paragraph below; simply add shims equal to the average air gap that appeared under the soft foot that is closest to the high foot. In the second solution, the amount to be removed from the high foot is approximately the same as the average air gap that appeared under the soft foot that is closest to the high foot. This is also the amount that would be

added to the remaining three feet besides the high foot, if the third option were chosen. Choose *only one* of the three possible corrections!

Analysis:

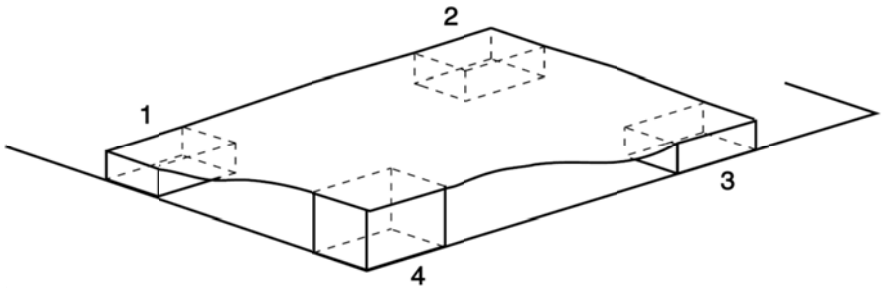

Fig. 7a

When one foot is too high (long), or has too many shims under it (here Foot 4), or rests upon a protrusion on the base, it is out of the plane of the other three. This would be the case with Foot 4 in Figure 7a above. This causes this foot and the one diagonally opposite to it (in this case Foot 2) to form a high "ridge" across which the machine will bow when you tighten all the feet.

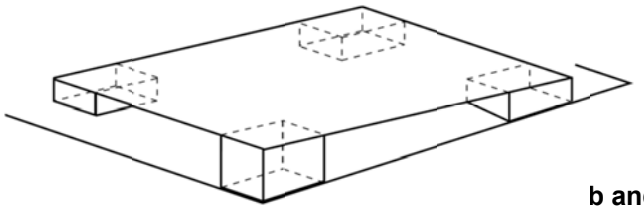

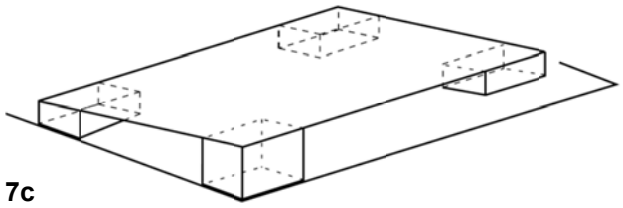

b and 7c

This in turn will cause the two feet adjacent to the high foot to be soft. The machine "rocks" across the high ridge formed by the high foot and the one diagonally opposed to it. The soft feet adjacent to the high foot are lifted off their support surface and will present air gaps that taper away from the high foot and towards the corner diagonally opposite the high foot (see Figures 7b and 7c above.) The soft foot closest to the high foot offers the greatest influence on stress relief and therefore also tends to present the higher of the two laser readings. This foot can be shimmed up to eliminate the rocking condition (Solution 1), or, the high foot must have shims removed from it to bring it into plane with the remaining three feet (Solution 2). Of course, the remaining three feet may also be shimmed up to make a level plane with the high foot (Solution 3.) This is more work, but may be necessary if there are not enough shims to remove from the high foot.

Solution 1 is preferred because this will directly eliminate the soft foot problem while having no effect on the existing alignment of the machines, whereas Solutions 2 and 3 correct the problem but have a marked effect on the existing alignment, which may be inconvenient. Therefore, Solution 1 (which is also the easiest to effect) is the best alternative. Solution 1 also takes advantage of the fact that the 'high foot rocking soft foot' behaves much like the 'short foot rocking soft foot'. This characteristic is particularly useful when employing the short cut method that we have alluded to earlier, which has proven to be an excellent diagnostic technique for rocking soft feet. This method is presented next.

A Short Cut to Analyzing and Correcting Rocking Soft Foot

The "Short Cut Method", pioneered by Mr. Pedro Casanova of LUDECA, is a very effective technique for diagnosing *any* rocking soft foot problem. However, this procedure should *only* be applied to rocking soft feet (the Type 1 soft feet), and not to any other types of soft foot conditions.

Outline of the Procedure

1) Your laser system discovers a rocking soft foot.
2) Loosen *both* diagonally opposed soft feet. (In other words, both soft feet should be loosened together, leaving the other two (not soft) feet tight.)
3) Manually feel the shim packs under the soft feet. Try to wiggle them.
4) Diagnose the problem and correct it as follows:
   a) Prepare your laser system to measure soft foot on the foot whose shim pack still felt snug, and take a measurement by *tightening* that anchor bolt (with the diagonally opposite on still loose!)
   b) Now loosen the foot you just measured again, and prepare your laser system to take a reading on the diagonally opposite soft foot.
   c) Take a reading at this foot by tightening its anchor bolt, again with the diagonally opposite foot loose.
   d) Shim both of the soft feet you just measured by the amounts just indicated by your laser system.
   e) Take another set of laser soft foot readings to make sure all problems have been eliminated.

Explanation:

If you have a *short foot rocking soft foot* (Type 1a), then, upon loosening both soft feet, you will find that the machine tends to rest upon the three feet that are not short. These form a plane, so the short foot lifts off its shim pack, which will feel loose. With both of these diagonally opposed feet loose, your laser system will accurately measure the foot that is short and reveal the amount that it is to be to be shimmed since this short foot can now move freely without the restriction of the diagonally opposite foot acting hindering it. The foot that was not short (the soft foot diagonally across from the short foot), only comes up when the short foot is forced down; therefore, with the short foot loose it will now rest upon its shim pack, which will feel snug. Tightening this foot will reveal no movement, and hence no correction to be performed at that foot.

You may, of course, use feeler gauges to determine the right amount to insert under the short foot. This too will correct the problem. As explained earlier, your laser system only sees the absolute value of the movement of the shafts, and calculates the undistorted foot movement that would have produced the observed change in vertical angularity.

If you have an *even rocking soft foot* (Type 1b), the machine will tend to rest upon the two high feet as it levels itself, raising both "short" feet off their shim packs. Both of these will feel loose, and when you tighten each of these feet individually, with their diagonally opposite number loose, your laser system will reveal the exact amount that you must shim them both by to eliminate the problem. You'll note that the amount of shimming needed will be about half of what each foot originally came up individually, when its diagonally opposite partner was tight.

A *high foot rocking soft foot* (Type 1c) will manifest itself in similar manner to the short foot rocking soft foot. If you follow the procedure outlined above exactly, your laser system will tell you what to do to fix the problem accurately.

Always follow up any corrections with a new round of laser soft foot readings to confirm that the problem has indeed been eliminated (step 4e in the procedure.)

Note that sometimes different amounts of shimming may be needed under each of the diagonally opposed soft feet if they are not equally "short". Your laser system will accurately "feel" the correct amount that needs to be inserted under each, as each is tightened with its opposite

partner loose. The "shorter" one foot is, relative to the other, the *more even* its air gap becomes when loose, until you have the case where only one foot is short, with a perfectly even air gap. This would of course be the 'short foot rocking soft foot' (Type 1a) situation. If you have a *high foot rocking soft foot* (Type 1c), the machine will tend to rest on the plane formed by the "high" foot and the two feet furthest from it, whereas the foot closest to it will lift off its shim pack, and appear to be a short foot. Simply shim this foot and the problem is solved! This approach is of course the same as that for the "short foot rocking soft foot". If the machine is now not perfectly level or aligned to the other machine, so be it! This will now just be a straightforward alignment problem, which you will correct anyway as you proceed in your tasks to the final alignment of the machine, after all soft foot has been eliminated.

Note that the Short Cut Method *only* works adequately for *rocking* soft foot situations, and saves you much time and effort by eliminating the need to actually measure the shape of the air gap under the soft feet with feeler gauges. You simply take advantage of the natural tendency of the machine to level itself and shim accordingly. Nothing could be easier! If you do not have a rocking soft problem, and instead find that the two largest laser soft foot readings are *adjacent* to each other, then you must proceed to analyze the situation formally, as outlined below.

Type 2: The Angled Soft Foot

Type 2a: Outside Angled Soft Foot

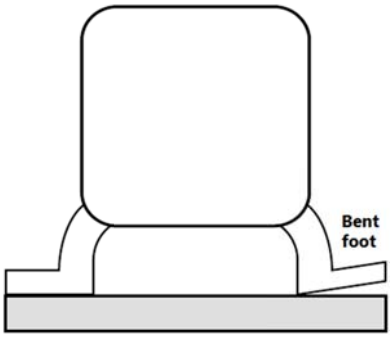

Fig. 8.1

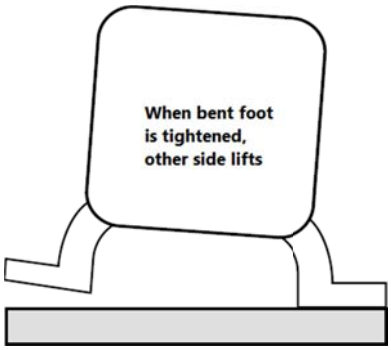

Fig. 8.2

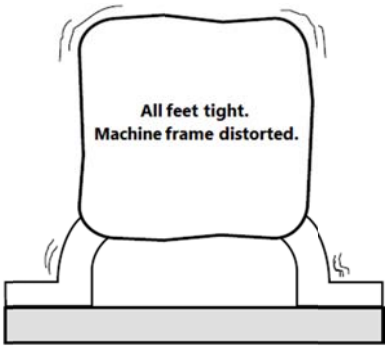

Fig. 8.3

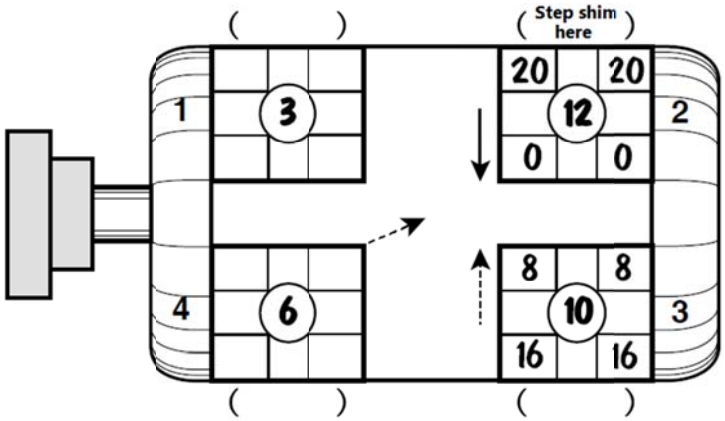

Fig. 9

Behavior:

Your laser system finds that three or even all four feet are soft, with the two largest readings occurring adjacent to each other, either on the same side or the same end of the machine.

Feeler gauges find that the foot with the largest laser reading slopes up to the outside. The air gap is markedly tapered (from largest to smallest gap) from outside to inside and points towards the foot with the second highest laser soft foot reading.

Conclusion:

The foot with the highest laser reading and tapered air gap is bent, or the support surface upon which it rests is angled (or both.) The foot rests on the support surface with only its inner edge touching.

Suggested Solution:

Step-shim the angled foot if you are pressed for time or resources to correct the problem, or remachine the feet, or the base, if it is the cause of the problems.

Analysis:

Since this situation is clearly not a rocking soft condition, you cannot apply the short cut method, and must instead proceed to learn more about the shapes of the air gaps that occur under the soft feet when you loosen them. This will greatly aid you in identifying the nature of the problem and consequently the likeliest solution for it. When you loosen the foot with the highest laser soft foot reading, feeler gauges clearly identify an angled (tapered air gap) soft foot, sloping from outside to inside. Remember that you are only loosening this foot alone, with the other three feet tight! When this outside bent foot (Figure 8.1) is forced down the base, it acts as a lever, pivoting on its inside edge or corner. This injects lifting forces into the frame, trying to pick up the other side (Figure 8.2.) The machine seeks to relieve the stress within it as much as possible by raising each of the other feet. Obviously, the foot that is bent has the greatest and most immediate effect on stress relief of the frame, thereby generating the highest laser reading when it is loosened. When it is tight, the foot which is adjacent to the bent foot and is axially aligned with the direction of the angle (or bend) will have the next largest effect on stress relief when loosened. This would be Foot No. 3 in the diagram in Figure 9 above. (If the bend is diagonal, then the forces will be transmitted diagonally across the frame and Foot No. 4 might display the second highest laser reading.) If not axially aligned with the bend, the third best source of stress relief occurs at the foot diagonally opposed from the bent foot, since forcing the bent foot down causes it to act similarly to a short foot, also tending to raise the diagonally opposite corner.

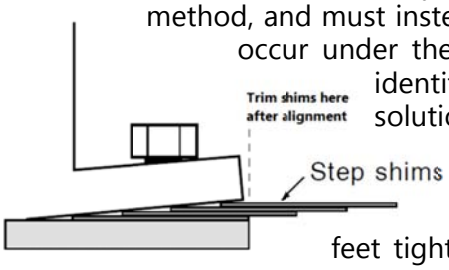

. 10

Step shimming is an excellent short-term "stop-gap" solution for this problem, which will keep the machine frame from distorting when you tighten the feet. That is, after all, your primary intention. The objective is to fill the uneven (angled) air gap under the foot as evenly as possible. This may, however, result in having to use more than four shims, since some may be already be there for alignment purposes while the "stepped" shims take care of the soft foot. Not to worry, this is a special exception to the "no more than three or four shims" rule. After the final alignment has been completed, you may wish to trim off the excess shimming material that sticks out past the edge of the foot (see Figure 10.) This will avoid safety hazards and also eliminate a possible temptation for a well-meaning colleague who happens by later, to push the shims in all the way in, thinking that perhaps he has discovered shims that are slipping out from under the foot! Much can be said about step-shimming technique; that however, goes beyond the scope of this paper, and if interested, we refer the reader to the article on shimming entitled *Best Practices: Machinery Alignment Shimming* by Alan Luedeking, which can be found here:
http://www.ludeca.com/casestudy/shimming_uptime0413.pdf

Just remember to use common sense when inserting the step shims; insert them gently until just touching— don't push them in with excessive force.

Type 2b: Inside Angled Soft Foot

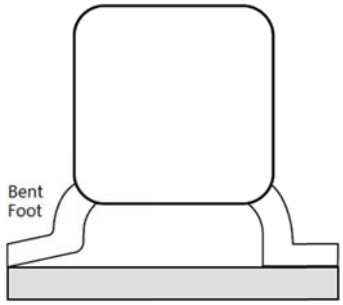

Fig. 11.1

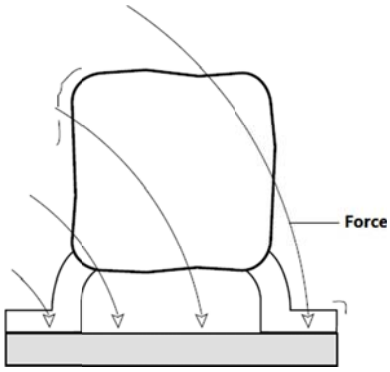

Fig. 11.2

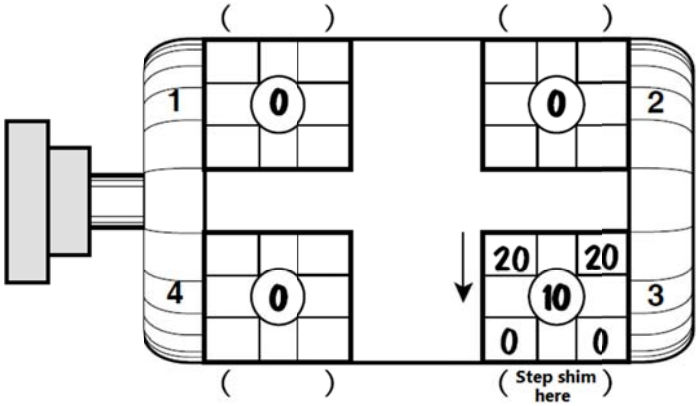

Fig. 12

Behavior:

Your laser system finds only one soft foot on the machine.

Feeler gauges find that the soft foot has a significant tapered air gap, largest from inside to smallest on the outside part of the foot.

Conclusion:

The foot that is soft is bent inwards, or is sitting on an angled surface which only contacts the outside edge of the foot.

Suggested Solution:

Step-shim the bent foot or re-machine the foot or the support surface.

Analysis:

Unlike the outside bent foot, which tries to lift the machine as you tighten it, the inside angled soft foot tends to pull it down. Since the pivot point for the foot is its outside edge, as you torque the anchor bolt and force it flat to the base you inject negative rotational forces into the machine frame. Thus, no lifting forces are transmitted to the other feet. Loosening them registers no stress relief, as the machine frame remains distorted. All the feet (excepting the bent one) want to go down, not come up. Again, step shimming the inside angled soft foot may solve the problem temporarily until you have the time and resources to correct the problem more permanently.

It should be noted that even though the forces induced in the machine frame by the inside bent foot are negative, some movement may be observed at the foot diagonally opposite to the inside angled one; this can be extremely confusing for the less experienced millwright, since he or she might be fooled into believing at first glance that they have encountered a rocking soft foot. However, the second highest value for soft registered by the laser system will not fall within 10% or

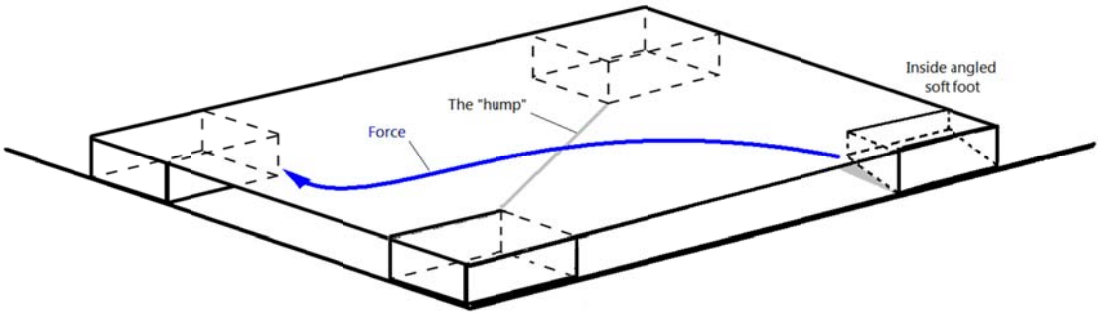

Fig. 13

20% so of the higher one (as it does with a true rocking soft foot) but will be found to be much less, probably not more than 50% of the value of the larger reading. This should ring alarm bells, signaling that this situation is not a true rocking soft foot condition. The reason that this behavior sometimes occurs is that the negative forces induced in the machine frame from the inside angled soft foot being tightened down tend to "wash over" the hump formed by the two nearest adjacent feet and then tend to rise a little at the diagonally opposite foot. Nevertheless, if the short cut method is tried, then, upon loosening both diagonally opposed soft feet together and taking the readings again as per the procedure, no correction will be indicated at the opposite foot from the bent one, and the angled foot itself will display a snug shim pack since the weight of the machine is still resting on the shim pack, even if only along its outer edge. Therefore, if no clear-cut correction is immediately obtained from the short cut method, that is a definitive indication that it is time to wield the feeler gauges and measure the shape of the airgap of the foot with the biggest laser reading, with the other feet tight. The tapered air gap from inside to outside will immediately be a dead giveaway as to what the problem is.

Type3: Induced Soft Foot

Fig. 14

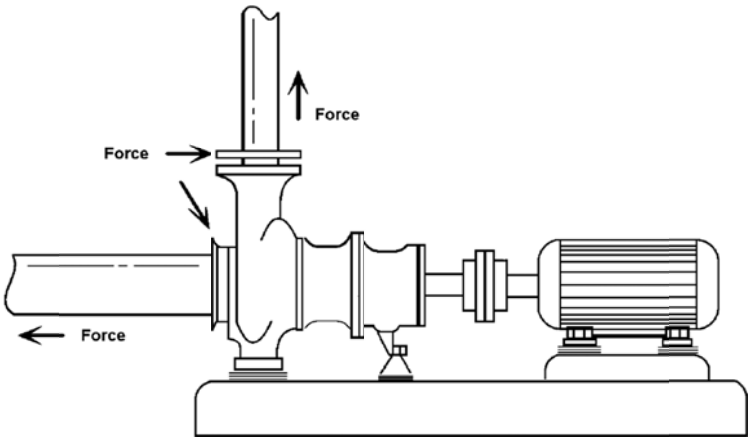

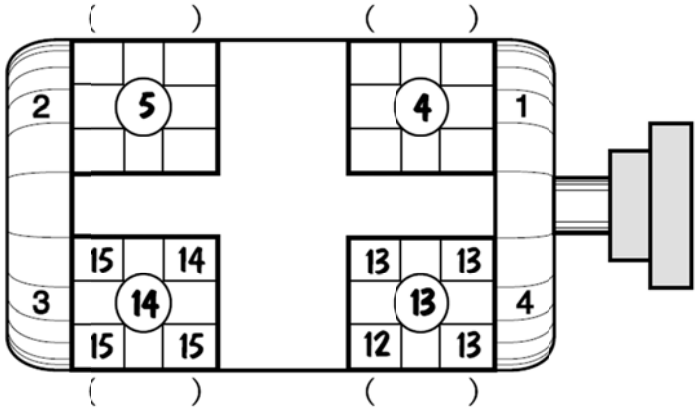

Fig. 14

Behavior:

Your laser system finds two, three or even all four feet soft. The two highest values tend to be along the same side or the same end of the machine frame. One pair of feet may even show zero soft foot. Feeler gauges find that the largest soft feet have fairly even air gaps; that is to say, no significant tapers can be determined.

Conclusion:

An external force is acting on the machine frame, which is trying to pull or push it up, down, sideways, or axially. This force will, in all likelihood, originate from the pipe stress of improperly fitted piping, poor pipe hanging, or excessively rigid electrical conduit. *Caution! Never loosen more than one foot at a time under these circumstances!* The external forces acting on the machine frame may be so great that loosening more than one foot may result in more force acting on the remaining feet than these can withstand, resulting in bending or sudden cracking or breaking of the machine feet. Therefore, as much to preserve the health of the machine as looking out for your own safety, never loosen more than one anchor bolt on a machine frame unless you are convinced that you can do so safely (as in the short cut method, which applies only to situations where you find the two largest soft feet to be diagonally apart.) It is always better to proceed with great care and err on the side of caution and safety.

In the example illustrated in Figure 15, the piping forces would be construed as pulling upwards more than sideways, since all four feet are soft. In cases where the pipe stress pulls the machine sideways, the tendency may be for this force to roll the machine, which would be evidenced by one pair of feet showing zero soft foot and the opposite pair lifting up.

Suggested Solution:

Eliminate the source of undue strain on the machine frame.

Analysis:

If the soft feet do not present significant taper patterns of the air gaps when loosened, and the overall stress-relief pattern doesn't tend to act like a rocking condition, then the machine frame is simply trying to move with whatever outside force is acting on it, to the extent possible. Since an outside angled soft foot clearly shows up tapered when loosened, as do the other feet which react to it, this situation obviously is different. Furthermore, we assume as a precondition, that a good rough alignment of the coupled machines exists by the time you are checking soft foot, eliminating coupling strain as a source of the observed soft foot behavior. Therefore, the only explanation for the observed soft foot condition must be that it is externally induced. The advantage of not loosening more than one foot at a time in a properly executed soft foot check is that you may prevent immediate damage to the machine frame from occurring if a great external force such as pipestrain exists, as well as preserving your own personal safety and that of others around you.

It is possible that poorly trained personnel forced a pipe to mate to a pump casing by using a "come-along" for instance, after all four feet were already bolted tight. Loosening two feet simultaneously might mean that the remaining feet are no longer quite strong enough to hold the machine frame in place against this force, with disastrous consequences as the frame or feet crack, or even break off. Incidentally, as mentioned earlier, with the Short Cut Method, which *does* involve loosening two feet at one time, you know up front, going into the procedure, that you have a rocking soft foot situation which safely allows you to safely loosen two feet at a time. It is highly unlikely that an induced soft foot from external forces acting on the frame will present as a rocking soft foot. Still, if in doubt, do not loosen more than one foot and proceed instead to perform a pipestrain check with your laser system, to verify whether or not pipestrain exists and to quantify its impact (if any) the shaft alignment of the machines.

Type4: Squishy Soft Foot

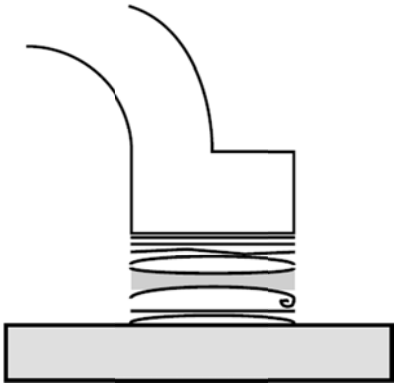

Fig. 16

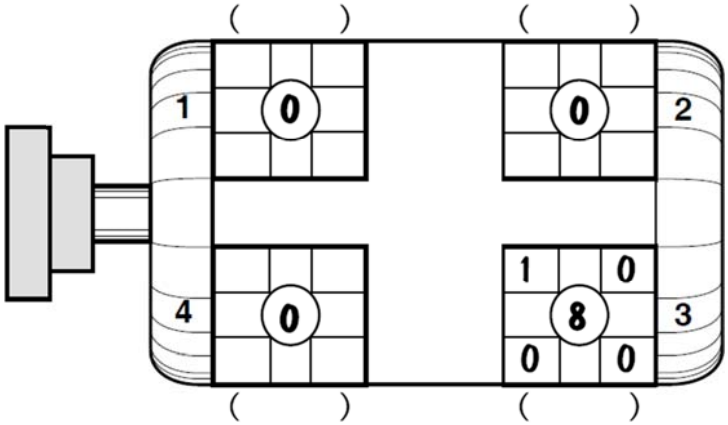

Fig. 17

Behavior:

Your laser system finds one or more soft feet. Feeler gauges find little or no air gap under the soft feet.

Conclusion:

A "squishy" or spring type soft foot exists.

Suggested Solution:

Eliminate the springy condition under the feet.

Analysis:

This behavior is probably caused by having too many shims, bowed or bent shims, shims with burrs, or oil, grease, or otherwise dirty conditions under the feet. If your laser system indicates that a soft foot condition exists, it is evidence that the situation is bad enough that significant relative shaft movement occurred, upon loosening a foot. Yet, if the foot that was loosened does not display a significant air gap, it can only mean that whatever caused it to move has expanded or grown with the foot as it moved, filling the gap between the foot and the support surface as it went. This can only be the result of a leaf-spring type of shim pack under the foot. A squishy soft foot always means machine frame distortion. If no distortion exists when the foot is loosened, then instead the machine frame will be distorted as you tighten the foot and the spring gives way. If no distortion exists when the foot is tight, then the spring is so strong that it bends the frame as you loosen the foot, or no soft foot reading would have occurred. Therefore, either way, you have a problem.

If thorough cleanup was done beforehand, and no more than three or at most four good quality precut stainless steel shims were used in the initial rough alignment of the machine, this problem should have been automatically eliminated before even reaching the stage where a formal soft foot check is performed. One other possibility for a seemingly squishy soft foot happens if the anchor bolt bottoms out in the foundation: full torque is achieved yet the foot is still loose! Following, we present a few examples of unusual or unorthodox situations:

The "Floating" Soft Foot

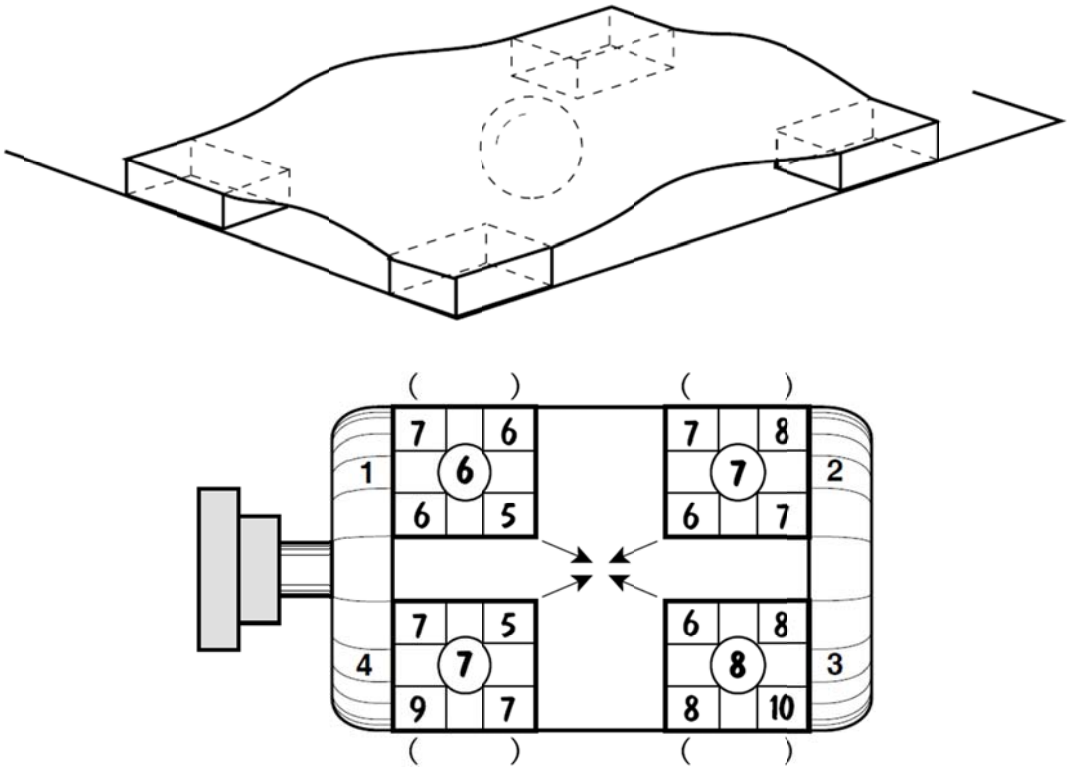

Fig. 19

Behavior:

Your laser system finds that all four feet are soft. Each foot is loosened one at a time. Feeler gauges find tapered air gaps under all four feet, all of which point inwards (from highest to lowest.) See Figure 19.

Conclusion:

There is a high spot on the base, located inside the area bounded by the feet, which is lifting the machine frame higher than any of the feet.

Suggested Solution:

Remove the protrusion or foreign object which is stuck under the belly of the machine.

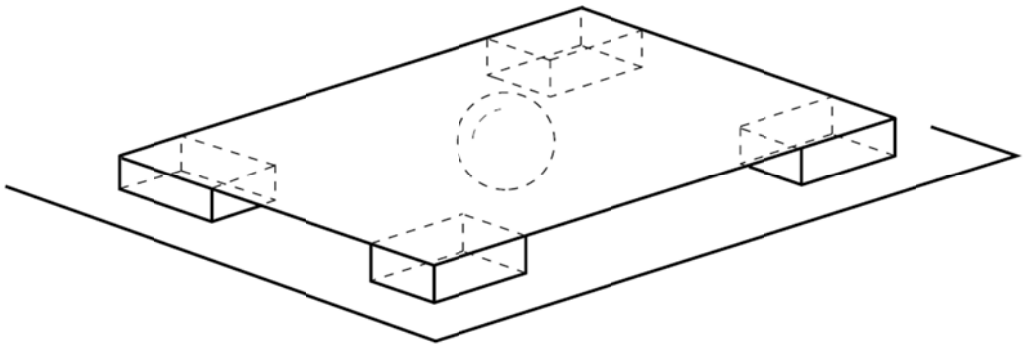

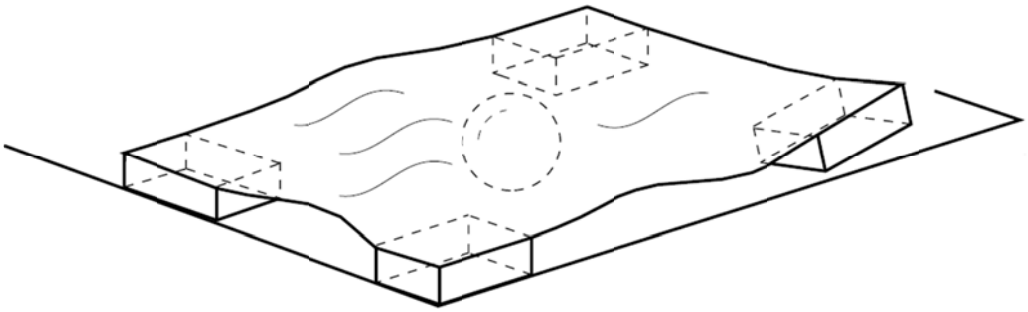

Analysis:

If all four feet come up, something is bowing the frame out of the plane of the four feet (see Figure 18.) Sometimes a foreign object such as a loose nut or a piece of debris finds its way underneath the belly of the machine. This should be caught when cleaning up and rough aligning the machines at the beginning of the job. It can happen, however, that removing shims for a negative alignment correction causes the motor to "bottom out" on such an object, introducing a surprise soft foot condition. As the feet are tightened, the frame deflects across this protrusion, causing each foot to pop up individually with an outside angled air gap pointing inwards towards the location of the "high" spot. See Figures 20 and 21. Similar behaviors can occur when a vertical jackscrew or positioning device is not sufficiently backed off prior to making negative (downward) corrections to the alignment.

Gaps Without Soft Feet

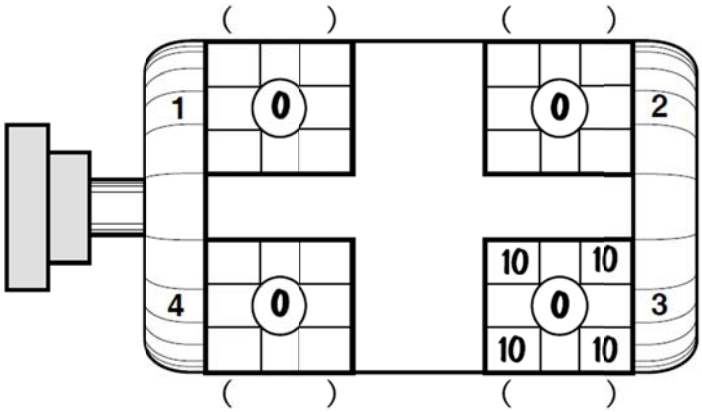

Fig. 22

Behavior:

Upon checking for soft foot, your laser system finds none (i.e., no shaft movement occurs upon loosening the feet), yet feeler gauges (or even the naked eye) discover a significant gap under a foot when that foot is loose, and no gap when the foot is tight. Alternatively, your laser system reads a small soft foot but the feeler gauges find a much larger gap.

Conclusion:

Chances are you have a foot that is cracked or broken, or one that is very weak on this machine frame. It is also possible that the base is flimsy, or the sole plate has come loose in the grout. This simply means that the foot (or support surface) can flex and move freely upon tightening or loosening an anchor bolt, causing the gap to appear and disappear, without affecting the rest of the machine frame. Shimming to fill this gap is enticing but rarely effective; since the gap can come and go as it pleases without affecting the frame, it follows that the effects on soft foot correction or alignment of shimming this foot will be unpredictable.

Suggested Solution:

The only real solution to this problem is to repair the machine, the base, or both. On the other hand, if you find that the machine does respond to alignment shimming corrections, and the foot is *not* damaged or broken, perhaps the problem can be ignored, since no actual distortion of the machine frame, bearings or shaft is taking place when the bolts are tightened (i.e., no harm comes to the machine.)

VII. Complex Soft Feet and Multiple-Footed Machines

The foregoing discussion and examples of soft foot conditions all illustrated straightforward situations where a single type of problem was acting on the machine frame. More often than not, these behavior types will adequately describe the majority of the soft foot problems encountered in the field. It may happen however, that two or more distinct types of problems exist simultaneously in a machine frame, causing strange behavior patterns to occur which defy short cuts or easy diagnosis. In these cases, only careful analysis will lead to a solution. For example, an outside bent foot may also be short. If the bend is aligned with the foot next to it, both that one and the foot diagonally opposite will have high soft foot readings. Which is higher depends on whether the soft foot is more bent than short, or vice-versa. Either way, the correct application of the diagnostics techniques and principles presented thus far will greatly reduce the amount of fruitless "trial" and unnecessary "error" that might otherwise plague a soft foot correction procedure. Always begin your analysis procedure by measuring and analyzing the shape of the airgap that appears under the foot that had the highest laser soft foot reading. If the mystery is not immediate cleared up, measure and analyze the foot with the second highest soft foot reading, then analyze the overall behavior of the machine in light of this information. Ask yourself, what are the likeliest causes for the machine to act or behave in this manner when I loosen or tighten anchor bolts? This will set you far along the path to a solution. If you make a mistake, that is okay: you will immediately realize it because your problem did not get better, or you made another soft foot worse. So you try a different tack. If a correction you attempt ends up solving one of the problems in a complex soft foot situation, then, when you recheck soft foot on all the feet again, the other problem that was also acting on the machine frame will suddenly emerge that much more clearly and fall into one of the readily recognized behavior patterns that you are already familiar with. You then simply proceed to correct that problem, without undoing what you did before, and voilà!—you have eliminated your soft foot problems and can now proceed to the final alignment of the machines.

Three-Footed Machines

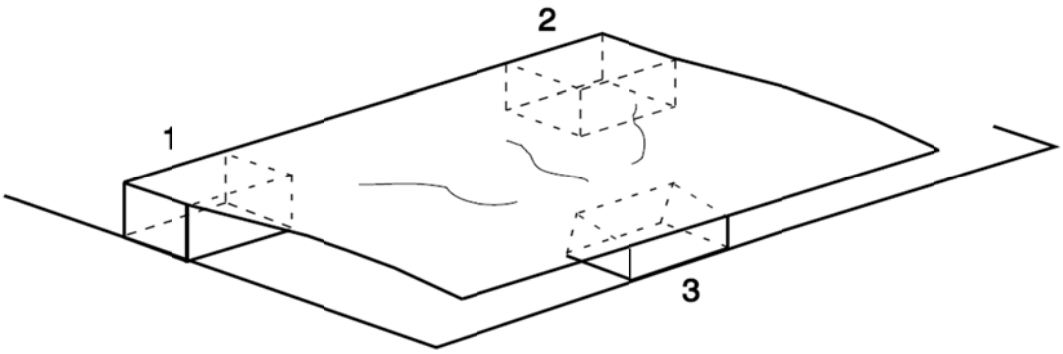

Some smaller gearboxes have three-footed frames which, in principle, should have no soft foot since three points always define a plane. However, as the feet are not points but pads, whose larger surface areas need to mate with their support surfaces, this gives rise to the possibility for angled soft feet. If the third foot which is positioned by itself on one side of the machine midway between the other two feet has an outside angled soft foot in the side-to-side direction, it may cause all three feet to rise when loosened individually; however, this foot, which is by itself in the middle, will raise the frame evenly on that side. This means that no angular movement of the shafts occurs, so your laser system may not recognize the soft foot on that side. Check this middle foot anyway, by

entering the Front to Back Foot distance as the axial distance from that foot to any of the others. If a significant soft foot reading *is* obtained it means that the soft foot condition is *twisting* the machine frame. Any soft foot that occurs on the side of the machine with two feet always has an angular component to its movement that will be readily measured by your laser system. Diagnose and correct any observed soft foot condition according to the diagnostic principles previously described.

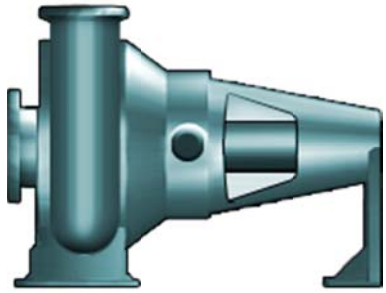

Fig. 24

On the other hand, a three-footed machine whose single foot is located at the back or front end of the machine, on the axis of the shaft, such as shown in Figure 24, may produce abnormally high soft foot readings, because of the calculation formula* for soft foot being applied by the laser system which assumes readings taken on a four-footed machine.

You may notice in the formula that the value for the observed angularity is doubled, for the reasons explained on page 5 and illustrated in Figure 3. In a three-footed machine where the single foot or support acts directly on the shaft because it is located directly under it, rather than indirectly as on a four-footed machine, this will produce an erroneous value for the calculated soft foot because this value should not be doubled. Therefore, keep this effect in mind when checking for soft foot on machines whose feet lie directly under the shaft centerline (as in some pumps and gearboxes.)

Multiple-Footed Machines (machines with more than four feet)

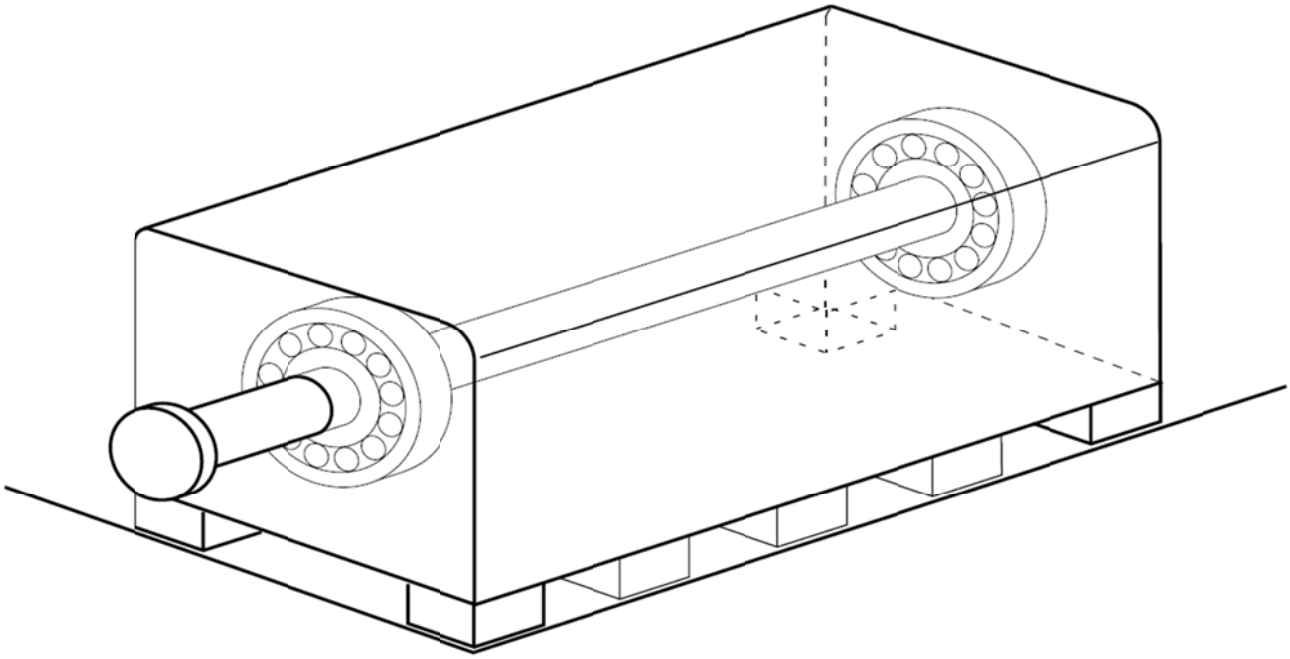

Fig. 25

* See Formula 2 on page 4.

Unless the machine frame is *very* large, these applications should be treated like any four-footed machine, with the following caveats: Generally, the *four feet nearest the bearing housings* should be tightened and all other support points loosened (whether inboard or outboard of these feet.) Since these four feet are nearest the bearings, they will have the most immediate influence on shaft alignment. They support the bearings and shaft more directly than the rest of the feet which only support the machine housing. Since three points define a plane, it is important that no more than three feet remain tight while checking any other foot. Otherwise, a distortion may be present in a part of the machine frame which cannot be relieved by loosening a foot located outside the area of influence of the four or more feet that are still tight. Once soft foot has been eliminated at the four "main" support points, the rest of the feet can simply be feeler gauged and shimmed according to the air gap that was miked. If the machine is very large and heavy, (such as commonly seen in a 10,000+ H.P. DC motor for instance), the machine casing will be very flexible in relation to the overall mass of the machine. In these cases, loosening any one foot will not produce any appreciable strain relief or shaft movement at more distant locations on the machine frame that can be measured with your laser system. Therefore, in these applications, we dispense with the laser system's soft foot readings altogether and proceed as follows: Loosen all of the intermediate feet and simply feeler gauge each foot nearest the bearings individually, and shim any air gap that appears. This will relieve localized distortions that might be present at or near these locations. Once this is done, proceed with the alignment of the machine by shimming these feet and the intermediate support feet as needed. This alignment procedure should also account for any desired air gaps between the rotor and stator of the machine, taking normal sag of the frame and rotor into consideration.

Vertical Flange-Mounted Machines

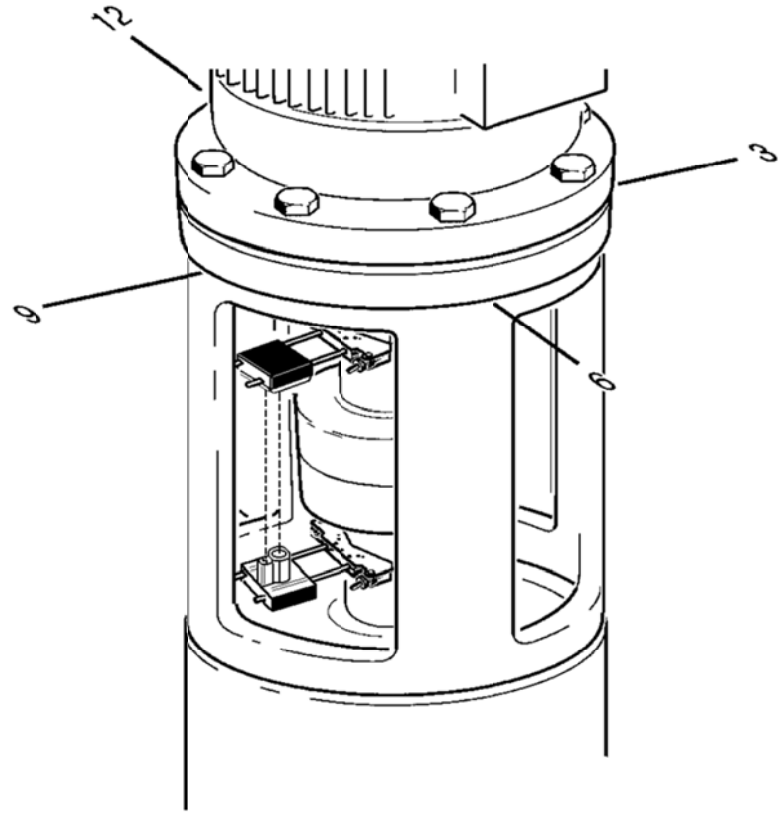

Fig. 26

If the support flange for a vertically mounted motor has more than four bolts, it is probably better to loosen all of them except four, located at the cardinal clock positions at which you intend to take misalignment readings. Check each of these four positions with a dial indicator, loosening only one at a time. If any bolt position yields a flange movement of greater than 0.002", mike the air gap with feeler gauges and apply the traditional diagnostic principles for the behavior pattern

observed. The idea is to eliminate frame distortion by shimming these four points until no further movement occurs. Once this has been done, simply feeler gauge the remaining bolt positions with their respective bolts loose and shim accordingly. A different approach is to rotate your laser alignment system to a position 90° degrees from the bolt position you intend to test, and use the Soft Foot measurement function. Use the outside diameter of the motor's support flange as the Front-to-Back Foot (FB) distance.

VIII. Conclusion

To sum up, measuring, diagnosing and correcting soft foot is as much an art as it is a science. If you have read this far, you know by now that there is still plenty of room for trial and error in the process. However, a bit of common sense and a good visualization of "why the machine is doing what it's doing" will take you a very long way down the road to eliminating the unnecessary trials and errors in the soft foot correction process. This paper aimed to have provided you not only with an insight into the causes, characteristics, and possible solutions to various soft foot problems, but also, and most importantly, with the mental tools to hone these visualization skills. The author hopes he has succeeded. ▣